How to Choose Fiber Photometry Accessories for The Most Efficient Signal Transmission?

In this article, we will describe detailed information about fiber photometry accessories. You will understand how to choose the right one.

First, let's look at the principle. Fiber photometry uses time-correlated single-photon counting (TCSPC) optical fiber optics to measure the optical signals emitted by fluorescent molecules in the brain. Based on this, an optical fiber probe with a smaller diameter can be used to realize the transmission and collection of fluorescent signals.

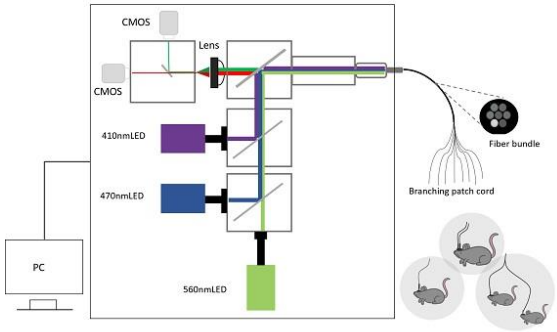

Working Principle of Fiber Photometry

1. How to choose the core diameter and numerical aperture (NA) of the consumables?

The parameters for core diameter and numerical aperture of fiber and ceramic ferrules need to be the same, to avoid the loss of transmitted light. If not, the loss of transmitted light will occur. For example, the core diameter of the ferrule is larger than that of the fiber, the transmission of the excitation light will not be affected, and the collection of the emitted light will be greatly lost.

2. Can the ceramic ferrule for optogenetics experiments be used for fiber photometry?

The ceramic ferrule can be used for both optogenetics experiments and fiber photometry. The autofluorescence of the ceramic ferrule is very low, which has no effect on fiber photometry experiments. In addition, black ceramic ferrule, and black ceramic bushing, which can better avoid the interference of ambient light, are recommended for fiber photometry.

Black Ceramic Ferrule

3. Are there any special requirements for the materials of optical fiber?

Different raw materials of optical fiber will result in different autofluorescence values. Common optical fibers need to be bleached with a fiber bleacher before use. The bleaching time of each time is more than 1.5 hours. After bleaching, the autofluorescence can be reduced by 50%-75%, but it will gradually recover over time. Therefore, it is necessary to repeat the bleaching before the next use.

R819-1 Photobleaching device

The optical fiber is made of low autofluorescence materials to ensure a low autofluorescence value, and there is no need to repeat bleaching in experiments. In the case of detecting some weaker signals, low autofluorescence optical fiber is more advantageous.

4. Can fiber photometry experiments be carried out with an Optical rotary joint?

An optical rotary joint is an optical device that realizes laser transmission, which can avoid optical fiber entanglement caused by animal activity. The main parameters include insertion loss rate, rotation variation, light transmission rate, etc. It is usually used for optogenetics experiments, and for long-term stimulation and observation experiments in awake and free-moving animals.

The optical rotary joint is not recommended for fiber photometry in most cases because the excitation light and emitted light energy are low, and the use of the rotary joint will affect the detection of weak signals.

If the experimental animals are moving too actively or in some special scenarios (social test, etc.), you can choose the special rotary joint for fiber photometry (for details, consult sales of RWD).

5. How to choose optical fiber consumables for multi-channel recording?

With one interface, the fiber photometry system can realize multi-channel recording, you can choose multi-channel optical fiber.

Multi-Channel Optical Fiber

6. Will the experimental effect be better if the core diameter and numerical aperture (NA) are larger?

All the consumables need to have the same core diameter and numerical aperture to achieve the highest efficiency of optical transmission and recording. With the same parameters, increased numerical aperture and core diameter indicate enlarged light entrance area and increased signal level. Since the larger the core diameter causes greater damage to the animal's brain, 200μm, NA 0.39 can meet most mice's experimental needs.

If there is not a perfectly matched one, we recommend an optical fiber with a numerical aperture or core diameter larger than the ceramic ferrule. In this case, the power of the excitation light can be appropriately increased to achieve the best excitation effect, while the return of the emitted light is not affected.

7. How to avoid the interference of ambient light to the greatest extent possible in experiments?

The black ceramic ferrule, black ceramic sleeve, and black-clad optical fiber can minimize the interference of ambient light. In addition, the dental cement can be blackened to reduce the penetration of ambient light.

If you have any questions on which method best meets your research needs, feel free to contact us to discuss your model. We have many resources available, from scientist webinars to journal citations, to help point you in the right direction.

For more information about the Fiber Photometry System, please visit our website (www.scintica.com) or feel free to reach out to us via email at info@scintica.com or by phone at 832-548-0895 and we would be glad to assist you.